The firing and co-firing of biomass in large pulverised coal boilers.

W R Livingston
Doosan Power Systems

IEA Exco Workshop Jeju
November 2013

Doosan Power Systems

Biomass co-firing projects

Date	Subject of contract	Site	Customer
2001	Biomass co-firing system Design study	Tilbury Power Station, England	RWE
2002	Biomass (olive residue) co-firing Consultancy and testing	Ferrybridge Power Station, Yorkshire, England	AEP
2003	Biomass co-firing trials	Ironbridge Power Station, Shropshire, England	TXU
2003	Biomass co-firing Consultancy and testing	Cottam Power Station, Lincolnshire, England	EDF
2003	Biomass co-firing Consultancy and trial work	Drax Power Station, Yorkshire, England	Drax Power
2004 – 2005	Biomass (sawdust) co-firing by pre-mixing and co-milling Consultancy and trial work	Cockenzie and Longannet Power Stations, Scotland	Scottish Power
2005	Direct injection system design	Drax Power Station, Yorkshire	Drax Power
2005	Biomass (olive residue) co-firing Consultancy and testing	Kilroot Power Station, Northern Ireland	AES
2009	Direct biomass co-firing system study (25% heat input)	Trenton Power Station	Nova Scotia Power Inc
2009	Installation of 12 direct injection biomass co-firing systems	Drax Power Station, Yorkshire	Drax Power

Projects involving the conversion of mills or boilers to 100% biomass.

Date	Subject of contract	Site	Customer
1992-93	Conversion of coal mills and burners to 100% wood pellet firing Design study, installation and commissioning of plant modifications	Hasselby CHP Station Stockholm Sweden	Hasselby Power
2009	Conversion from coal to 100% biomass firing Feasibility Study	Burger Station, Ohio	First Energy
2009	Conversion of Pulverisers from coal to 100% biomass (wood pellets) Design Study	Nanticoke, Ontario	Ontario Power Generation
2010	100% Biomass Firing Feasibility Study	Drax Power Station	Drax Power
2010	Conversion of two E-mills from coal to wood pellet firing	Drax Power Station	Drax Power
2010	100% Biomass Firing Feasibility Study	Uskmouth Power Station	SSE
2010	100% Biomass Firing FEED Study	Atikokan Power Station	Ontario Power Generation
2010	Conversion of a pulverised coal boiler to the co-firing of biomass and natural gas Feasibility study	Nanticoke Power Station	Ontario Power Generation
2011	The conversion of a pulverised coal boiler to 100% wood firing Feasibility Study and Contract to convert units 1 and 2 to 100% biomass	Ironbridge Power Station	E.ON UK
2011	The conversion of a pulverised coal boiler to 100% wood firing Feasibility and FEED studies	Tilbury Power Station	RWEnpower
2011	100% Biomass Firing Commercial contract	Atikokan Power Station	Ontario Power Generation
2012	Unit 2 100% biomass conversion – mills and burners	Drax Power Station	Drax Power Ltd.

The principal direct and indirect biomass co-firing options

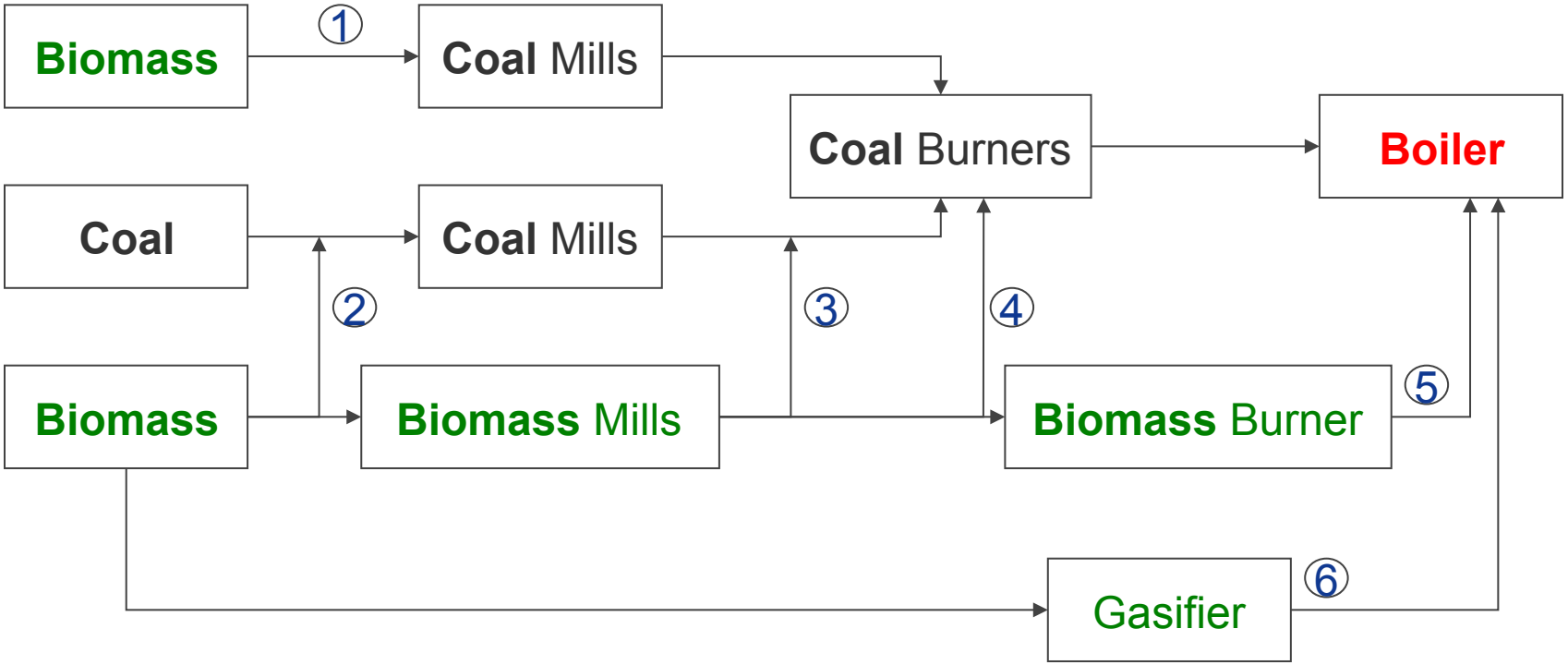

1. The milling of biomass (pellets) through modified coal mills,
2. The pre-mixing of the biomass with the coal, and the milling and firing of the mixed fuel through the existing coal firing system,
3. The direct injection of pre-milled biomass into the pulverised coal pipework,
4. The direct injection of pre-milled biomass into modified coal burners or directly into the furnace,
5. The direct injection of the pre-milled biomass through dedicated biomass burners,
6. The gasification of the biomass, with combustion of the product gas in the boiler.

The principal options available for the conversion of a coal boiler to biomass firing

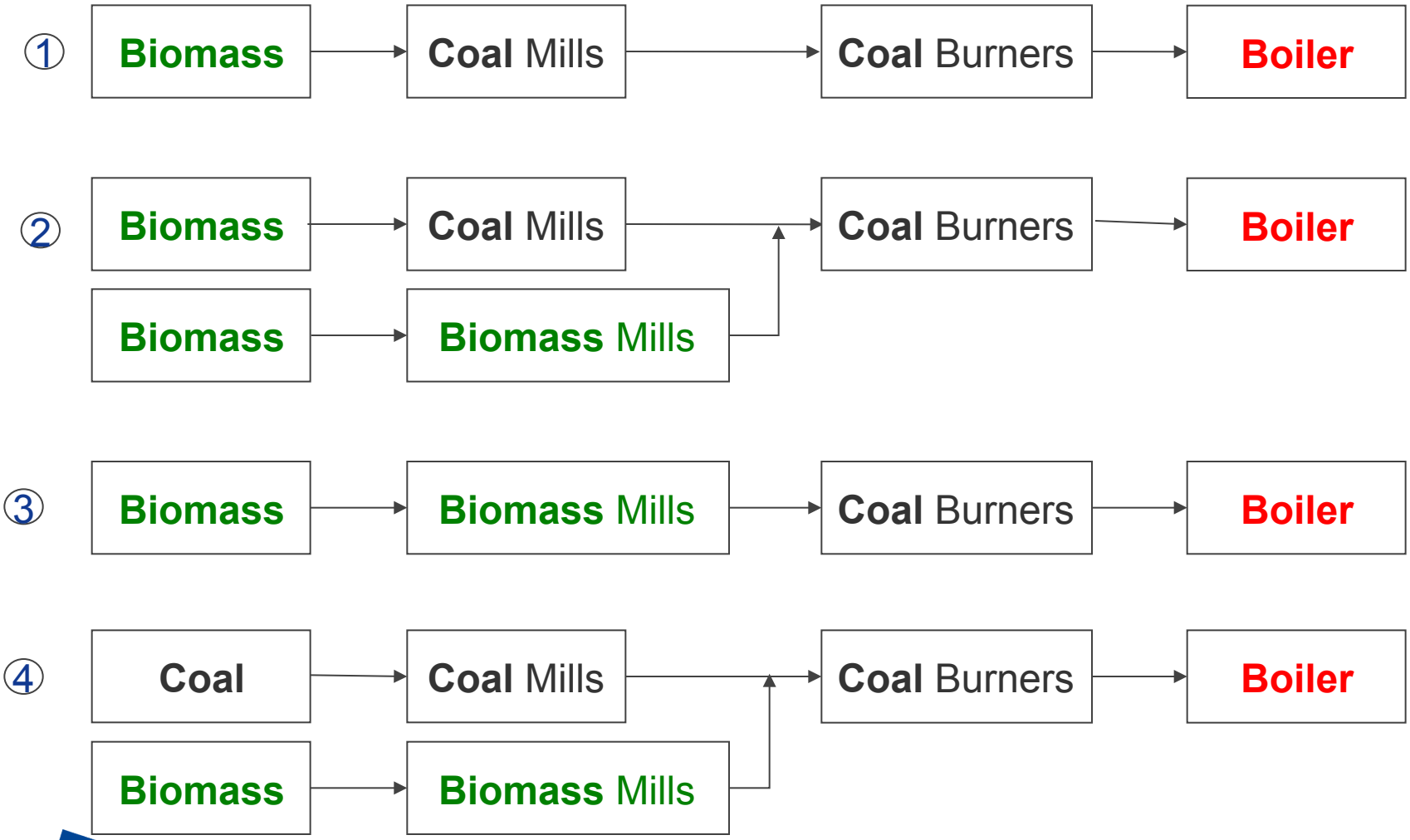

Doosan Power Systems

General biomass types

Agricultural products	Forestry products	Domestic and municipal wastes	Energy crops
Harvesting residues	**Harvesting**	**Domestic/industrial**	**Wood**
Straws Corn stalks	Forestry residues **Wood pellets**	MSW/RDF/SRF Scrap tyres Wood wastes Sewage sludges	Willow Poplar Cottonwood
Processing residues	**Primary process residues**	**Urban green wastes**	**Grasses etc.**
Rice husks Sugarcane bagasse Olive/palm oil/sunflower husks and residues Fruit residues Cereal straws and residues	Bark Sawdusts Offcuts **Wood pellets**	Leaves Grass and hedge cuttings	Switch grass Reed canary grass Miscanthus
Animal wastes	**Secondary process wastes**		
Poultry litter Tallow Meat/bone meal	Sawdusts Offcuts		

Biomass pre-mixing system

Drax Direct Co-firing
The biomass metering and feeding system

The prototype direct co-firing system has been in successful operation since summer 2005, firing a range of pre-milled biomass materials.

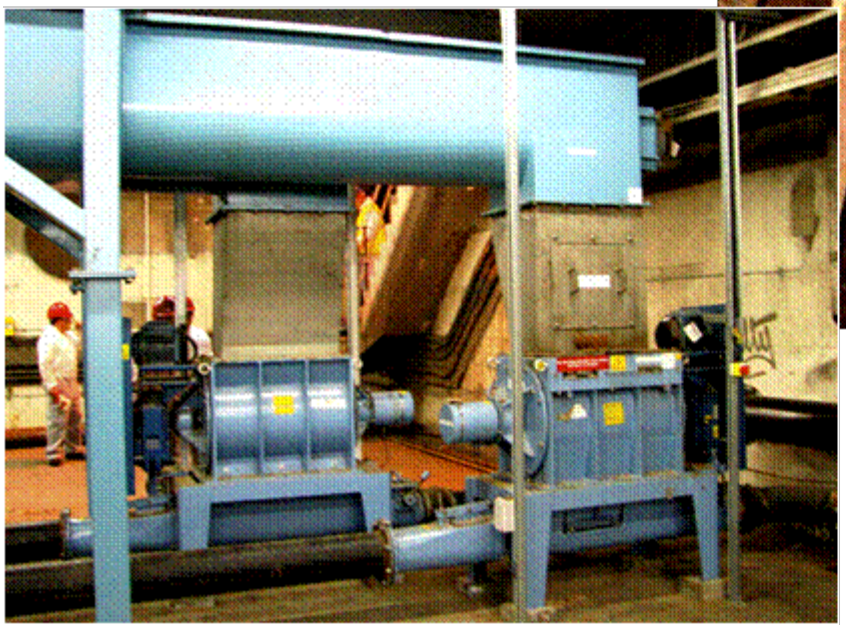

Drax Direct Co-firing
The biomass pipes and the injection point

- The injection point is in the mill outlet pipes, just downstream of the product dampers. The injection point is a simple shallow angle T-in, fitted with an actuated shut-off valve for the biomass,
- Both the mill and the burners are maintained within their normal operating envelopes for both the heat input and primary air flow rate. The maximum heat input from the mill group is not affected.

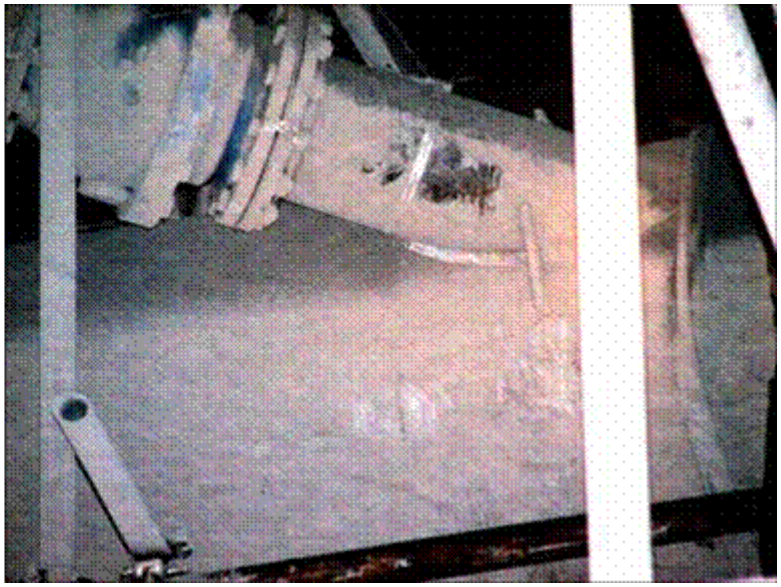

Milling biomass pellets in converted coal mills

Doosan Power Systems

Milling pelletised biomass in coal mills

- The milling of wood pellets in coal mills, and the firing of the mill product through the existing pipework and burners, is done at a small number of power stations in Europe, including Hasselby in Sweden
- The coal mills are very robust, and have high availability and low maintenance requirements
- Hammer mills are more sensitive to tramp material and have a much higher maintenance requirement, depending on the fuel quality
- The coal mill depends on a crushing mechanism, and tends only to break the pellets back to the original sawdust size distribution
- The mill has to be modified to operate with cold primary air and to maximise the fuel throughput
- There are generally no requirements for modifications to the coal mill grinding elements
- The maximum heat input from the mill group is significantly derated, commonly to around 50-80% of that with coal, depending on the mill configuration
- With torrefied materials or chars there is likely to be a finer product and a smaller derate.

Doosan Power Systems

Plant Experience of 100% biomass conversions

Hasselby in Stockholm, Sweden

- Heat and power plant successfully converted from coal firing to 100% biomass firing in 1993, and is still in operation
- Experience from Hasselby, and elsewhere, has indicated that the heat input from the converted mills is significantly derated, to around 50-70% of that with coal, but this can be supplemented with additional hammer mills.

- This approach to biomass firing is now being replicated in other stations in Britain and elsewhere.
- Two large ball and ring mills in a British power plant were successfully converted by Doosan Power Systems to 100% biomass pellet firing in 2010, with a further 2 mills converted in 2012.
- Doosan Power Systems has an ongoing involvement with a British Client in both Phases 1 and 2 of current biomass conversion project which involves the conversion of roller mills to processing wood pellets.
- Doosan Power Systems is currently working on a contract for a 100% biomass conversion project in Canada, involving the conversion of roller mills to the processing of biomass pellets and the supply of new burners for biomass firing.

Physical modifications to ball and ring mills

- The modification of the installed feeder, and recalibration, to take into account the nature and behaviour of the biomass pellets

- The installation of a rotary valve in the coal chute between the coal feeder outlet and the mill inlet is recommended to form an effective seal between the mill and the bunker hall
- The rotary valve would be brought into service prior to start-up of the fuel feeder and would stay in service for a short period after the fuel feeder was taken out of service.

- The modification of the bottom of the classifier return cone to provide more positive removal of the returned material
- The installation of internal modifications to the mill throat to maintain the correct air velocities
- The installation of internal baffles within the mill body to permit optimisation of the biomass throughput

- The modification of the classifier vanes and the mill outlet pipe to permit the optimisation of the biomass throughput.

Mill modifications

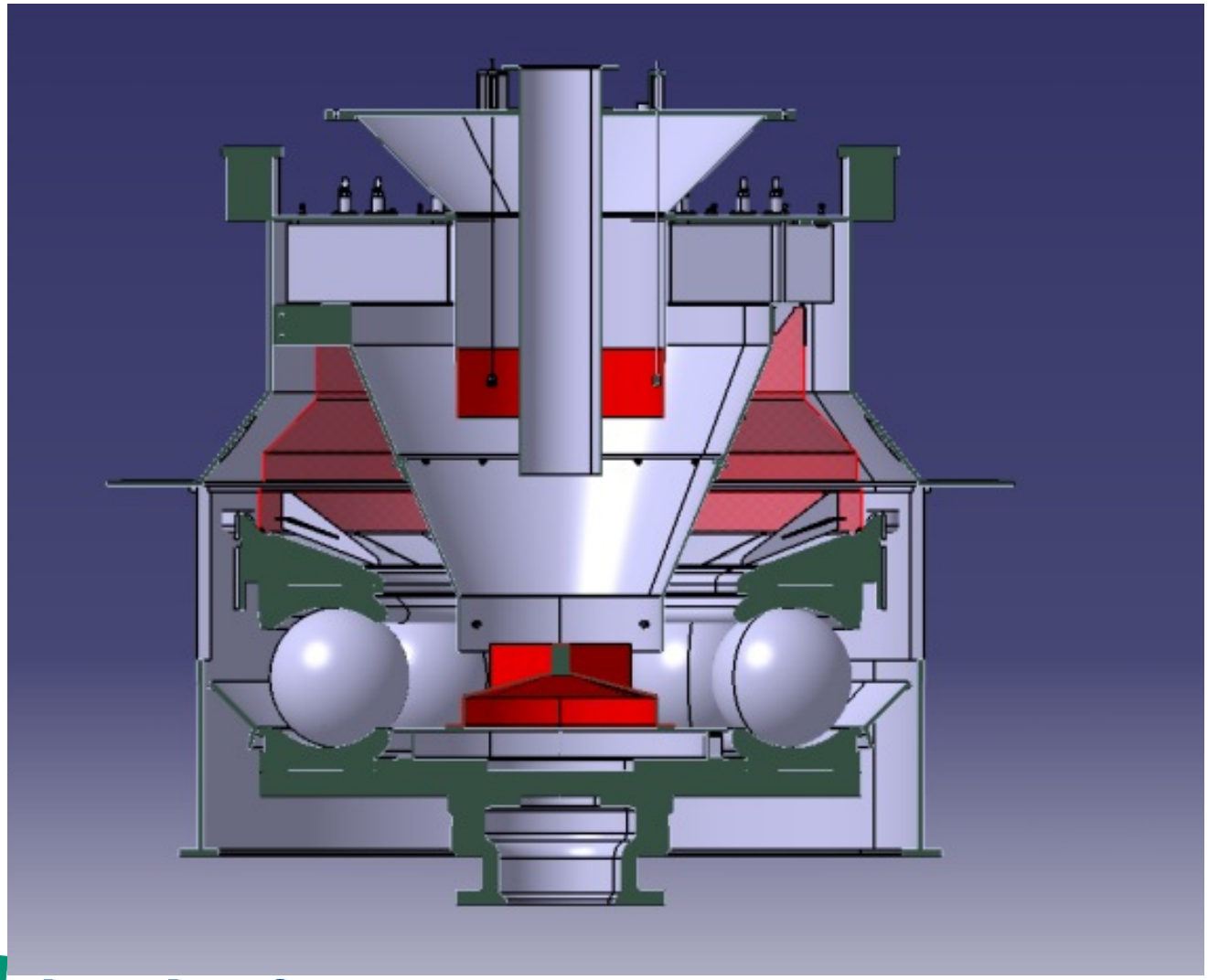

Atikokan – proposed mill modifications

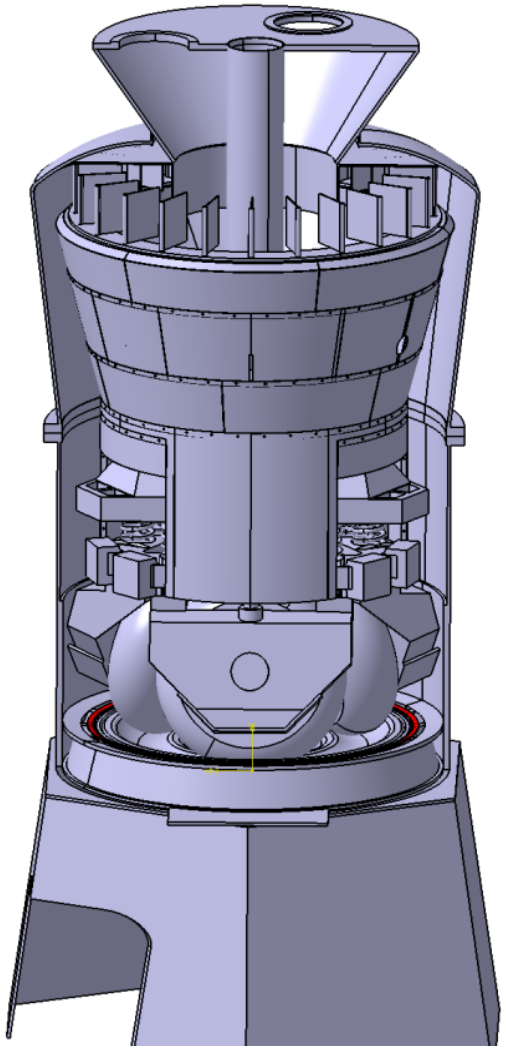

Doosan Power Systems

Mill safety issues

- The maintenance of control over the mill inlet and outlet temperatures at level appropriate to biomass materials is the key mill safety measure,
- There will be a requirement for modest modification of the coal mill operating procedures,
- The installation of steam inerting and water misting systems has not generally been required for biomass conversion projects.
- The installation of explosion detection and suppression systems has been carried out in some instances, as a client preference.

Combustion issues

Doosan Power Systems

Potential burner modifications

- The modification of the Doosan Babcock Mark III low NO_x burners for the combustion of milled biomass has been achieved successfully at a number of plants.

- There is a tendency for the flame produced when firing milled biomass with a topsize in the range 1- 3 mm to have the ignition plane located further out into the quarl than in a pulverised coal flame.
- This is considered to be a result of the longer heating times required for the larger biomass particles compared to pulverised coal.
- The result is that the flame monitor signal for the unmodified burners may be poorer than for a coal flame, particularly at reduced mill loads.
- There is no indication that the flames are unstable.

- The burner modifications are designed to bring the ignition plane back into the burner quarl, and improve the flame monitor signals.

Summary

- Vertical spindle mills have been modified successfully to process pelletised wood and produce an acceptable mill product.

- The combustion quality and efficiency is determined by the fineness of the milled biomass.
- There may be a requirement to modify the installed pulverised coal burners to ensure well anchored flames and good flame detector signals.

- The bottom ash and fly ash make will be much lower than with coal, and the carbon in ash may be significantly higher than with coal.

- Based on the experience at Hasselby and elsewhere, no significant changes to furnace and boiler performance are anticipated, and there should be no major pressure part modifications due to changes in boiler performance.
- The risks of excessive ash deposition and corrosion are controlled by the fuel specification, i.e. ash content and ash composition, and with the use of fuel additives.

- Uncontrolled dust, SO_x and NO_x emissions will be much lower than for coal firing and will depend on the fuel quality.

Questions?

Thank You

W R Livingston
Doosan Power Systems
Bill.livingston@doosan.com
0141 885 3873

Doosan Power Systems